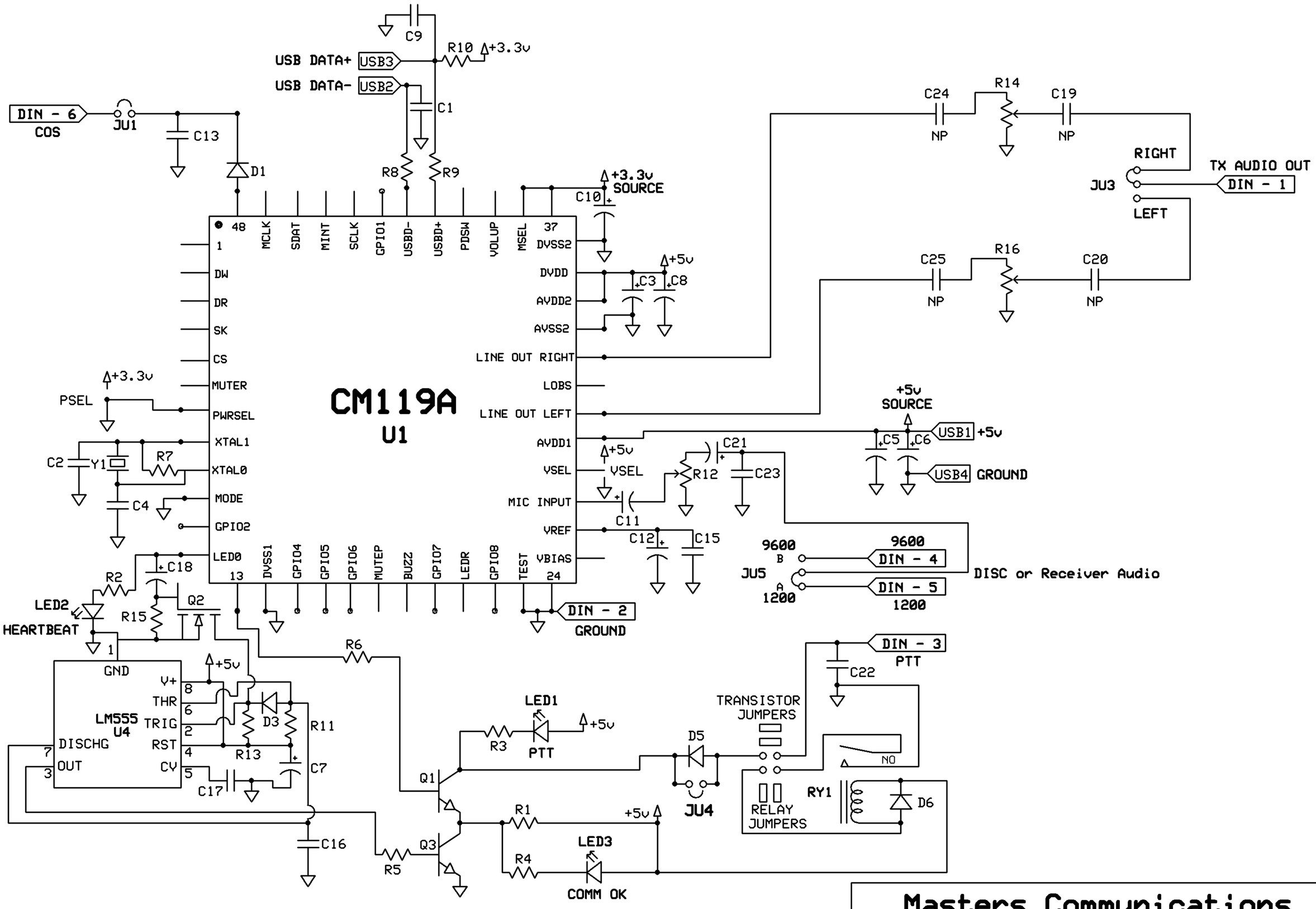

Masters Communications

DRA-36M Digital USB Radio Adapter

Kevin Custer	Rev 2	
	4-21/2024	